Composite Wall Problem Analysis

Continuum and Thermal Network Methods

Bob Cochran
Applied Computational Heat Transfer
Seattle, WA
TNSolver@heattransfer.org

ME 331 Introduction to Heat Transfer
University of Washington
October 17, 2017

Outline

- Composite Wall Problem
- Continuum Analysis Method
- Thermal Network Analysis Method

Description of the Composite Wall Problem

Composite Wall Model

Consider a composite wall:

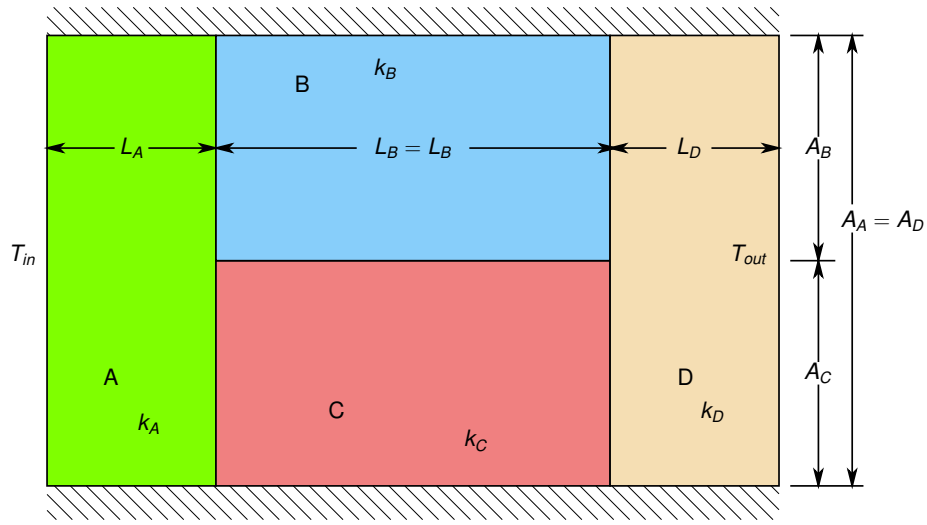

See Figure 3.3, on page 117, in [BLID11].

Model Parameters

Composite Wall Model

The inner wall temperature $T_{in} = 100C$

The outer wall temperature $T_{out} = 0C$

Region	Conductivity, k $(W/m \cdot K)$	Length, L (m)	Area, A (m^2)
A	1.0	1.0	2.0
B	$0 \leq k_B \leq \infty$	3.0	1.0
C	2.0	3.0	1.0
D	1.0	1.0	2.0

How does the heat flow rate through the wall vary as the thermal conductivity of region B changes? Compute the heat flow q_x (or Q) and plot as a function of k_B.

Solution Verification

Composite Wall Problem

An analytical solution is used to compare to analysis method results. Only applicable when $k_B = k_C$, a one-dimensional problem.

Using Equation (3.19), page 116, in [BLID11]:

$$R_{tot} = \frac{1}{UA} = \frac{L_A}{k_A A_A} + \left[\frac{k_B A_B}{L_B} + \frac{k_C A_C}{L_C}\right]^{-1} + \frac{L_D}{k_D A_D}$$

$$R_{tot} = \frac{1}{UA} = \frac{1}{(1)(2)} + \left[\frac{(2)(1)}{3} + \frac{(2)(1)}{3}\right]^{-1} + \frac{1}{(1)(2)} = \frac{7}{4} = 1.75 K/W$$

$$Q = q_x = UA\Delta T = \frac{(T_{in} - T_{out})}{R_{tot}} = \frac{(100.0 - 0.0)}{1.75} = 57.1429 W$$

Utilize the CHTUNS Solver

Continuum Model Analysis

- CHTUNS: **C**omputational **H**eat **T**ransfer on **UNS**tructured Meshes
  - An open source alternative to MATLAB's Partial Differential Equation Toolbox
  - MATLAB programming language, runs in Octave
  - Post processing visualization tools included
  - Solutions presented here utilize a vertex-centered Finite Volume Method
- Mesh generation utilizing Jonathan Shewchuk's `triangle` program:
  - `https://www.cs.cmu.edu/~quake/triangle.html`
  - Use the function `proctriangle.m` to convert `triangle` output to CHTUNS mesh data structure

Geometry for Mesh Generation

Continuum Model Analysis

Point and line numbering for planar straight line graph (PSLG) input to `triangle` (10 points, 13 lines).

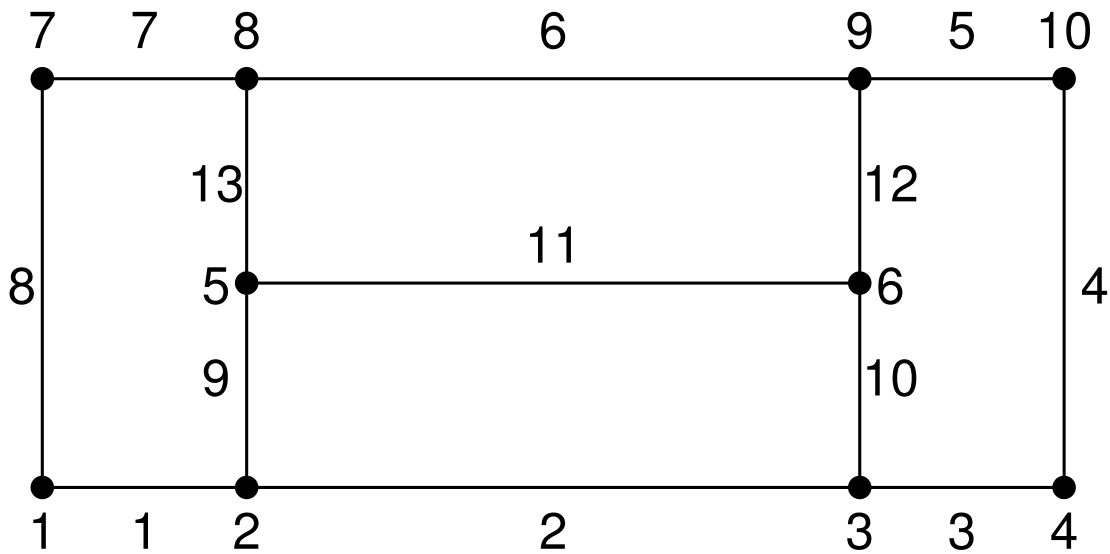

cwall.poly Input File for `triangle`

Continuum Model Analysis

```
# num. points, dimension, num. of attributes, num. of boundary markers
10 2 0 0
# point ID, x, y, <attribute>, <boundary marker>
1  0.0  0.0
2  1.0  0.0
3  4.0  0.0
4  5.0  0.0
5  1.0  1.0
6  4.0  1.0
7  0.0  2.0
8  1.0  2.0
9  4.0  2.0
10 5.0  2.0
# num. of segments, num. of boundary markers
13  4
# segment ID, endpoint, endpoint, <boundary marker>
1  1  2  1
2  2  3  1
3  3  4  1
4  4  10 2
5  10 9  3
6  9  8  3
7  8  7  3
8  7  1  4
9  2  5
10 3  6
11 5  6
12 6  9
13 5  8
# Number of holes
0
# of regional attributes and/or area constraints
4
# <region #> <x> <y> <attribute> <maximum area>
1 0.5 1.0 101
2 2.5 1.5 102
3 2.5 0.5 103
4 4.5 1.0 104
```

Command to Run `triangle`


```
triangle -pAqnea0.2 cwall.poly
```

- `-p` Triangulates a Planar Straight Line Graph (.poly file).
- `-A` Applies attributes to identify triangles in certain regions.
- `-q` Quality mesh generation.
- `-n` Generates a list of triangle neighbors.
- `-e` Generates an edge list.
- `-a` Applies a maximum triangle area constraint.

50 Node Mesh

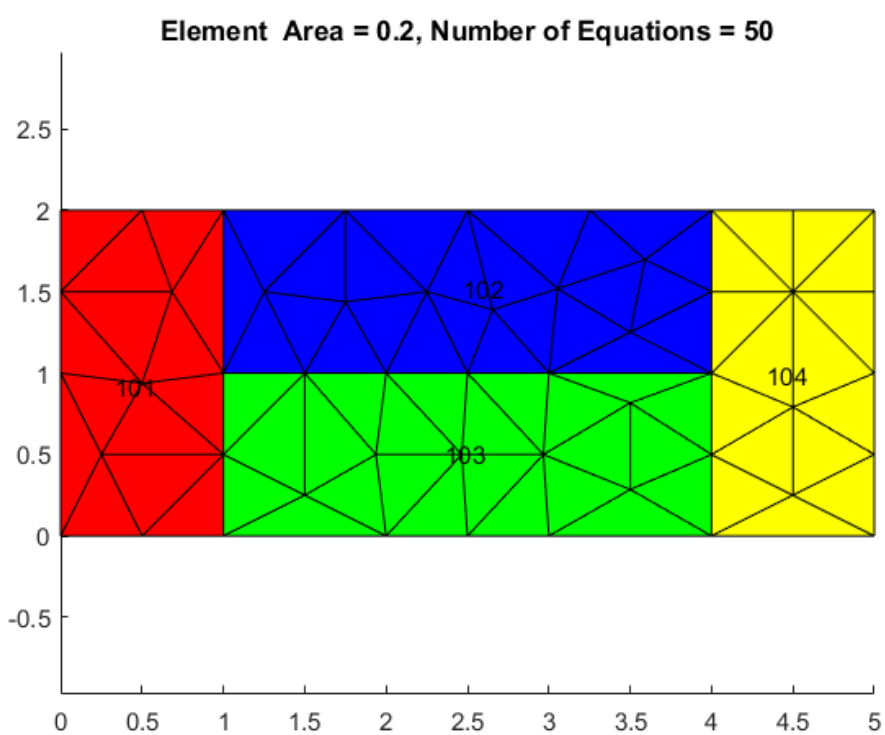

96 Node Mesh

Continuum Model Analysis

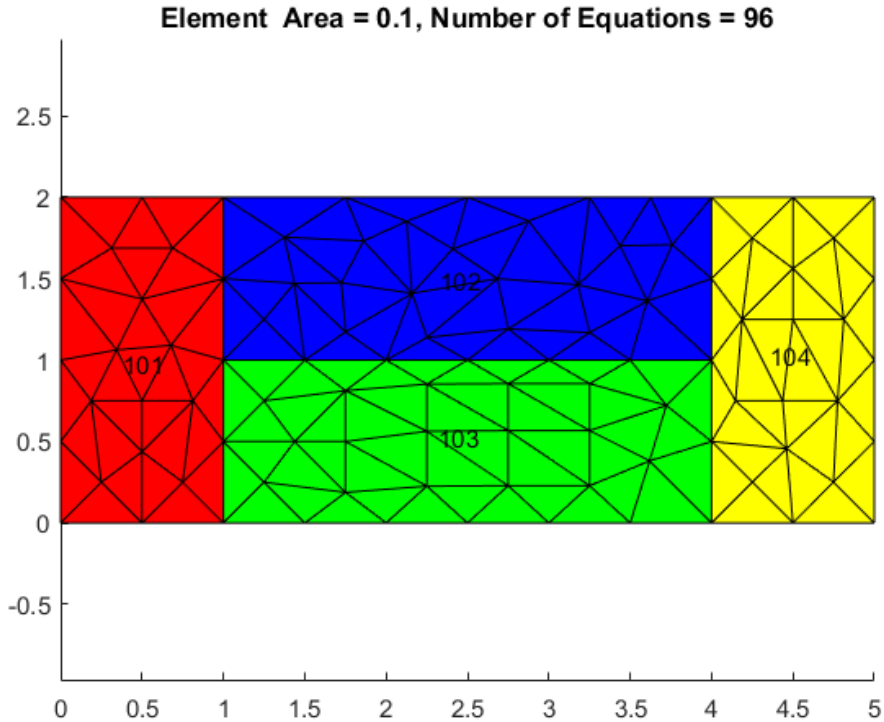

177 Node Mesh

Continuum Model Analysis

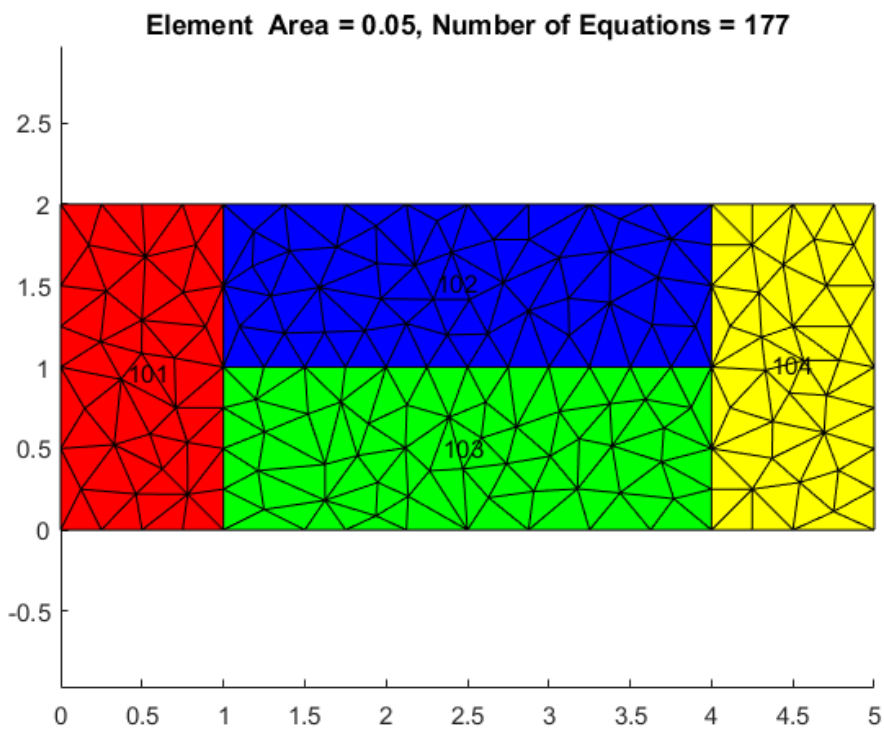

344 Node Mesh

Continuum Model Analysis

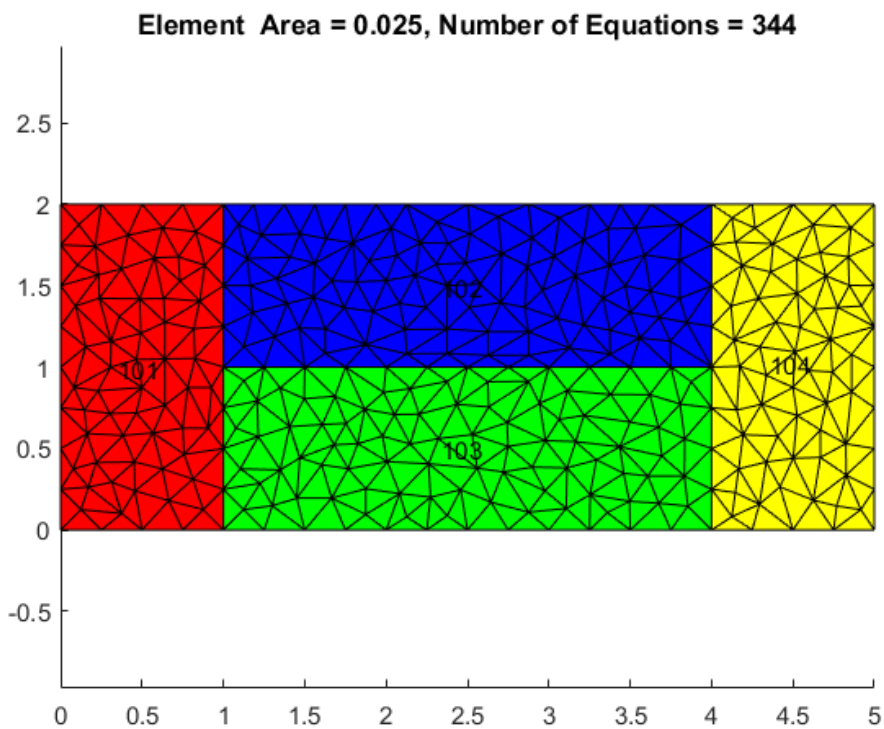

662 Node Mesh

Continuum Model Analysis

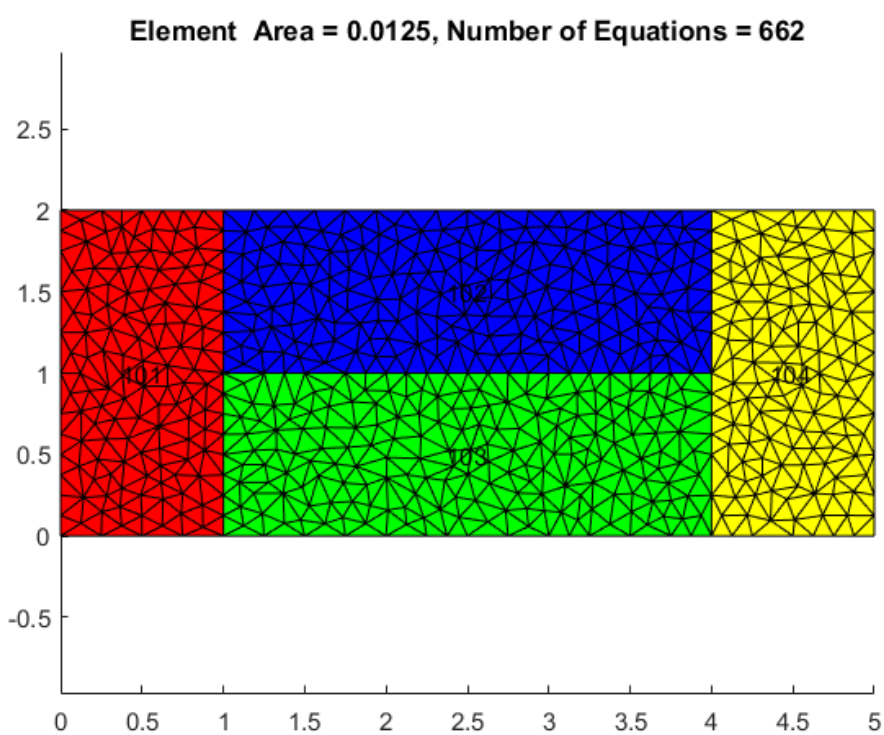

Mesh Convergence Study: Table

Continuum Model Analysis

Heat Flow Rate (W)

	Mesh Area Parameter				
k_B	0.2	0.1	0.05	0.025	0.0125
0.001	35.6899	35.0308	34.7171	34.3887	34.2625
0.01	35.8802	35.2366	34.9313	34.6118	34.4890
0.1	37.6730	37.1626	36.9273	36.6814	36.5872
1.0	49.5240	49.4669	49.4428	49.4176	49.4075
2.0	57.1429	57.1429	57.1429	57.1429	57.1429
3.0	62.3090	62.2884	62.2791	62.2697	62.2655
10.0	77.4238	77.1660	77.0342	76.9045	76.8375
100.0	90.6939	90.0867	89.7366	89.4018	89.2141
1000.0	92.5833	91.9190	91.5297	91.1587	90.9488

Mesh Convergence Study: Plot

Continuum Model Analysis

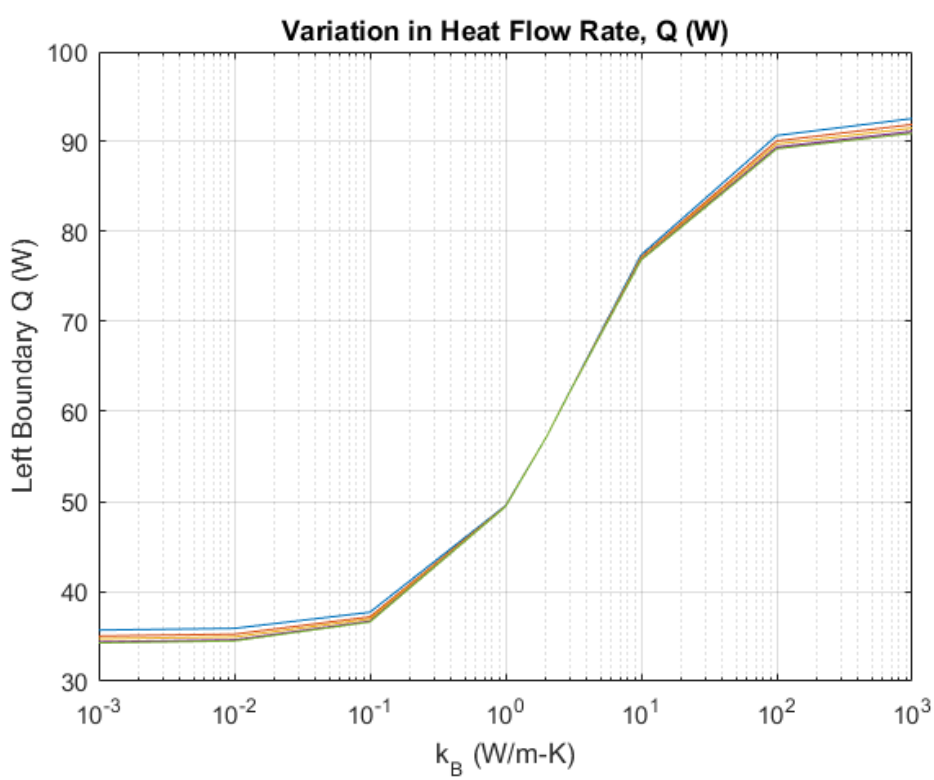

Temperature Contour Plot

Continuum Model Analysis

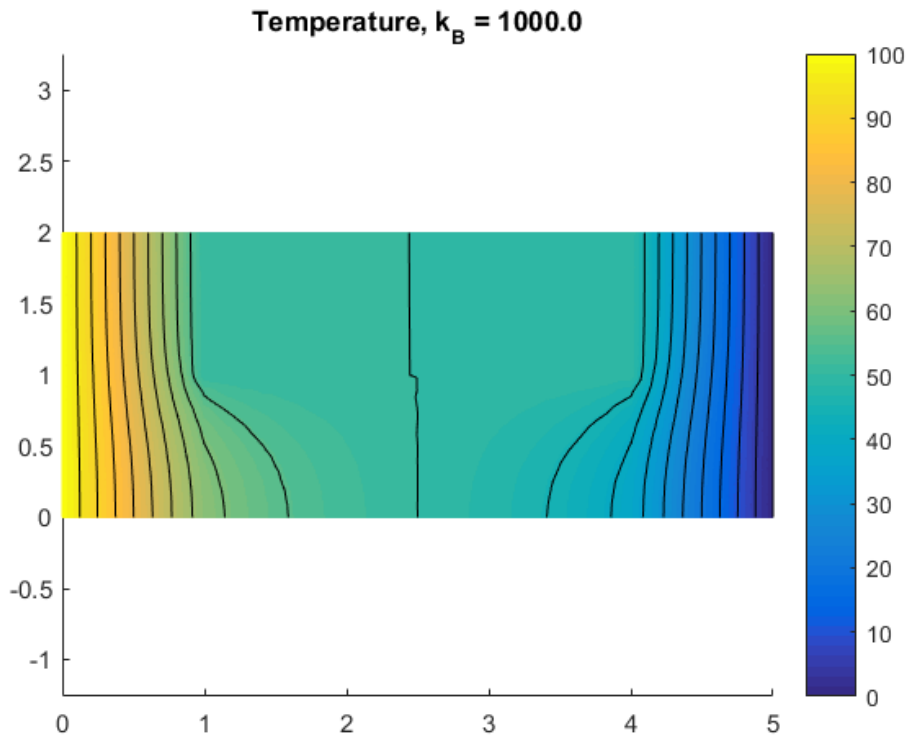

Heat Flux Vector Plot

Continuum Model Analysis

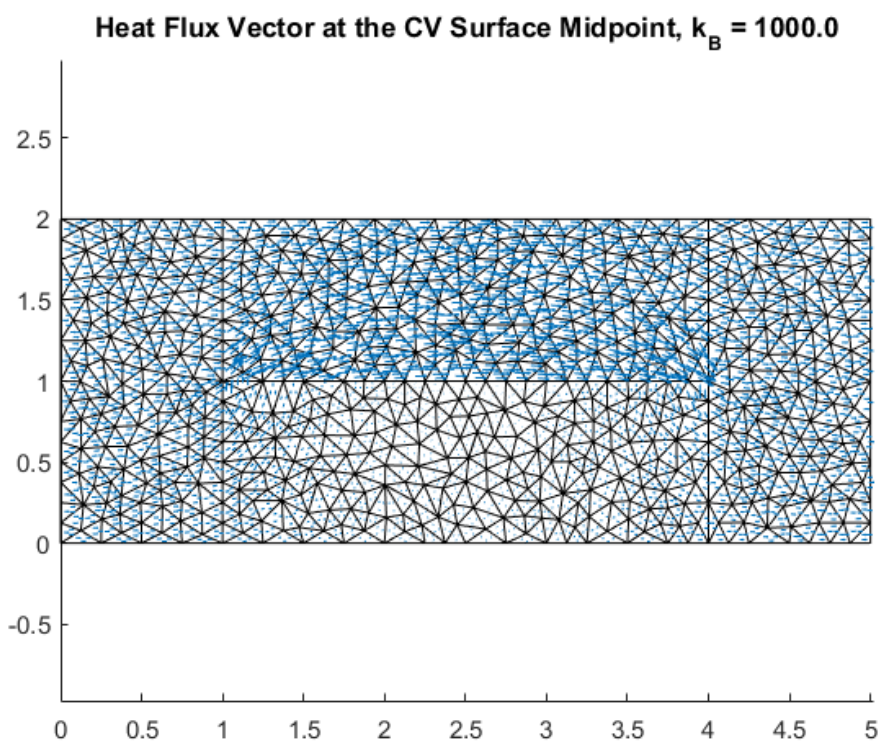

Thermal Network Model Analysis

- We will examine two different thermal networks for the composite wall
- This will lead to two different TNSolver models
- Run the models for the same range of k_B:

$$[0.001, 0.01, 0.1, 1.0, 2.0, 3.0, 10.0, 100.0, 1000.0]$$

First Approach

Composite Wall Model 1

There are four control volumes:

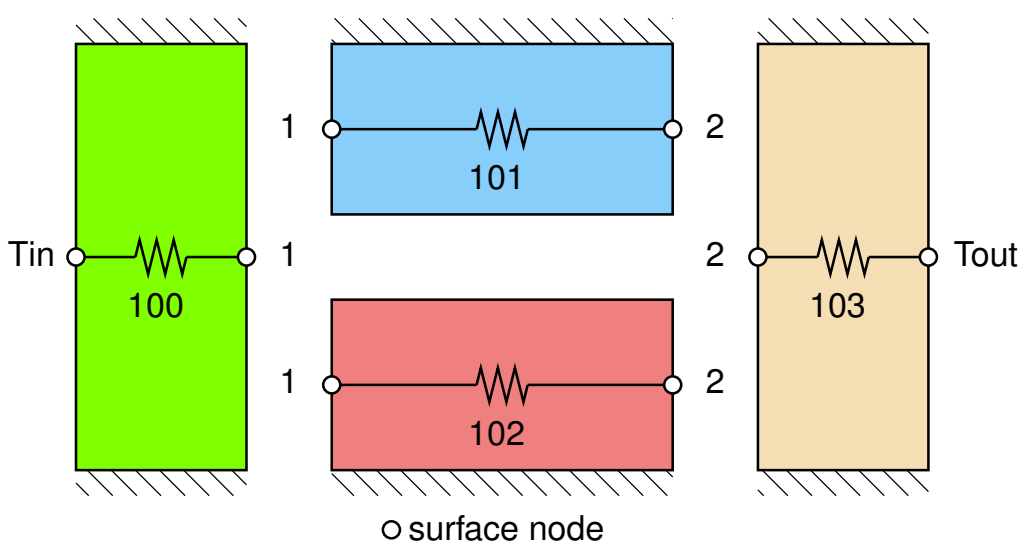

Network Diagram

Composite Wall Model 1

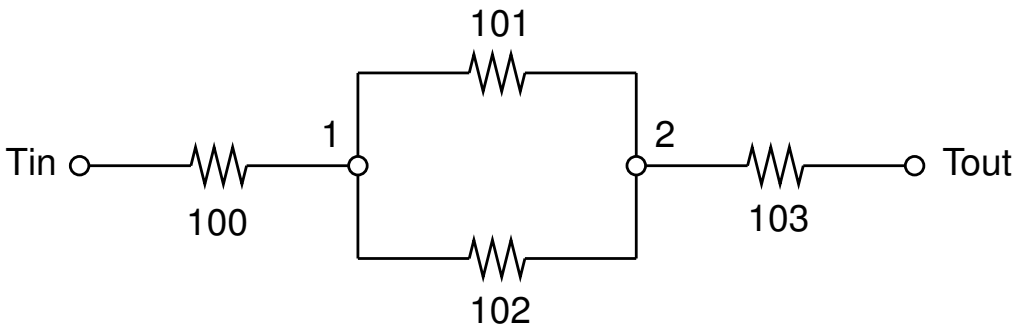

Compare with Figure 3.3 (a), on page 117, in [BLID11].

TNSolver Input File for $k_B = 2.0$

Composite Wall Model 1

```
Begin Solution Parameters

  title = Composite wall model: Approach 1 series-parallel
  type  = steady

End Solution Parameters

Begin Conductors

! label  type        node 1  node 2  parameters
  100  conduction   Tin     1       1.0  1.0  2.0 ! k_A L_A A_A
  101  conduction   1       2       2.0  3.0  1.0 ! k_B L_B A_B
  102  conduction   1       2       2.0  3.0  1.0 ! k_C L_C A_C
  103  conduction   2      Tout     1.0  1.0  2.0 ! k_D L_D A_D

End Conductors

Begin Boundary Conditions

! type    parameter(s)   node(s)
  fixed_T    100.0         Tin     ! inner wall temperature
  fixed_T      0.0         Tout    ! outer wall temperature

End Boundary Conditions
```

Total Heat Transfer over the Range of k_B

Composite Wall Model 1

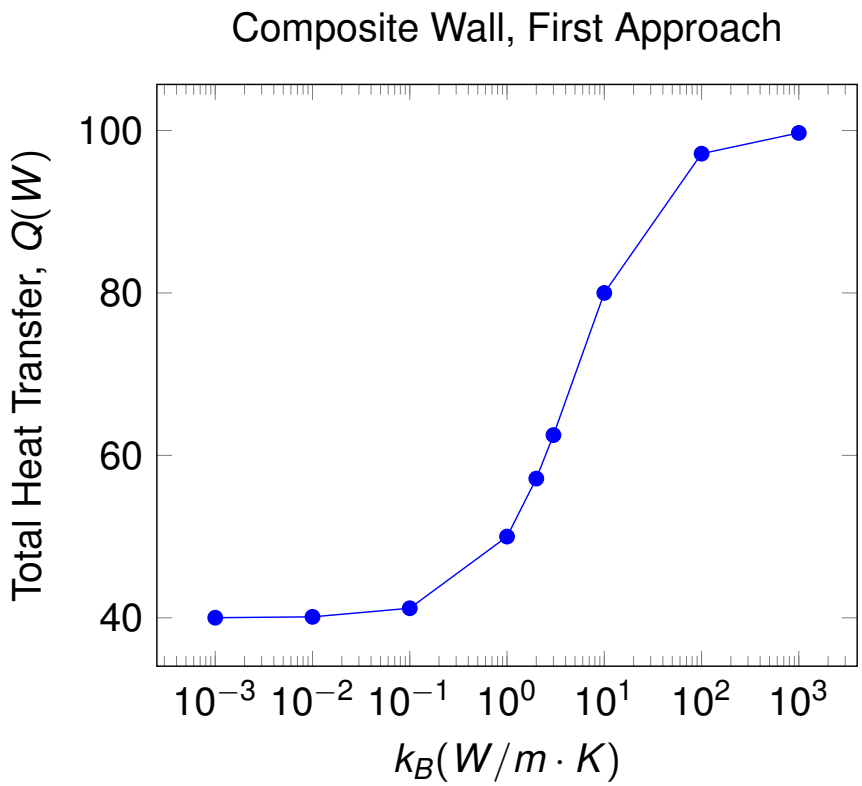

Second Approach

Composite Wall Model 2

There are six control volumes:

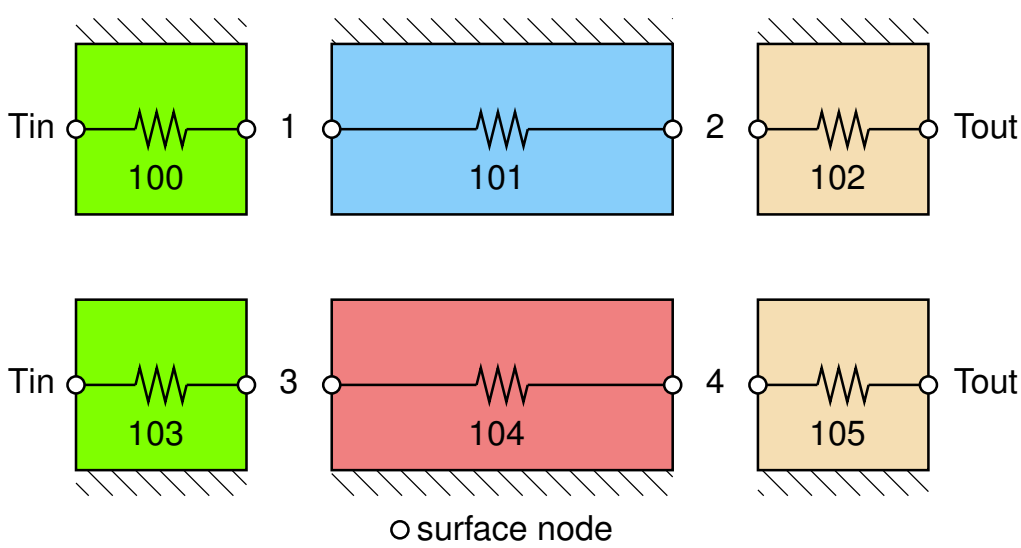

Network Diagram

Composite Wall Model 2

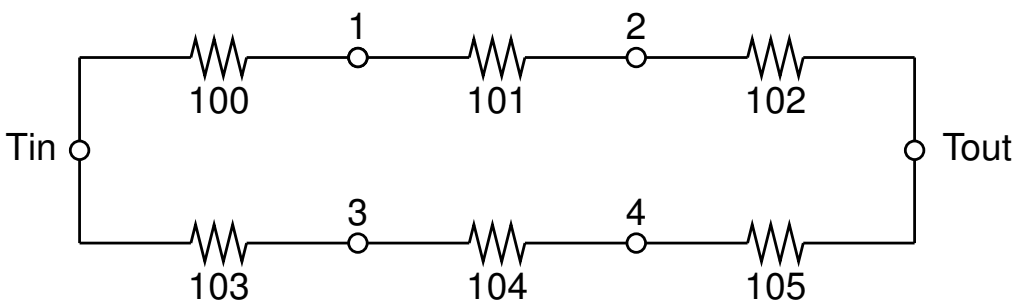

Compare with Figure 3.3 (b), on page 117, in [BLID11].

TNSolver Input File for $k_B = 2.0$

Composite Wall Model 2

```
Begin Solution Parameters

  title = Composite wall model: Approach 2 - parallel conductors
  type  = steady

End Solution Parameters

Begin Conductors

! label  type        node 1  node 2  parameters
  100  conduction   Tin      1       1.0, 1.0, 1.0  ! k_A L_A A_B
  101  conduction   1        2       2.0, 3.0, 1.0  ! k_B L_B A_B
  102  conduction   2       Tout     1.0, 1.0, 1.0  ! k_D L_D A_B
  103  conduction   Tin      3       1.0, 1.0, 1.0  ! k_A L_A A_C
  104  conduction   3        4       2.0, 3.0, 1.0  ! k_C L_C A_C
  105  conduction   4       Tout     1.0, 1.0, 1.0  ! k_D L_D A_C

End Conductors

Begin Boundary Conditions

! type     parameter(s)    node(s)
  fixed_T    100.0          Tin    ! inner wall temperature
  fixed_T      0.0          Tout   ! outer wall temperature

End Boundary Conditions
```

Total Heat Transfer over the Range of k_B

Composite Wall Model 2

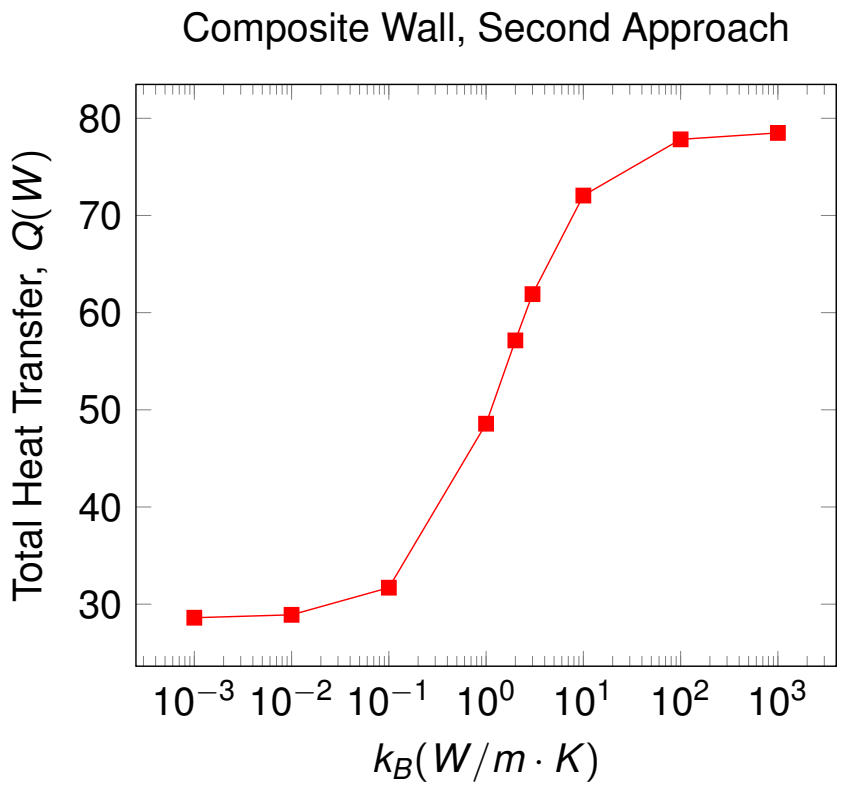

Comparing Continuum to Network Analysis

Method Comparison

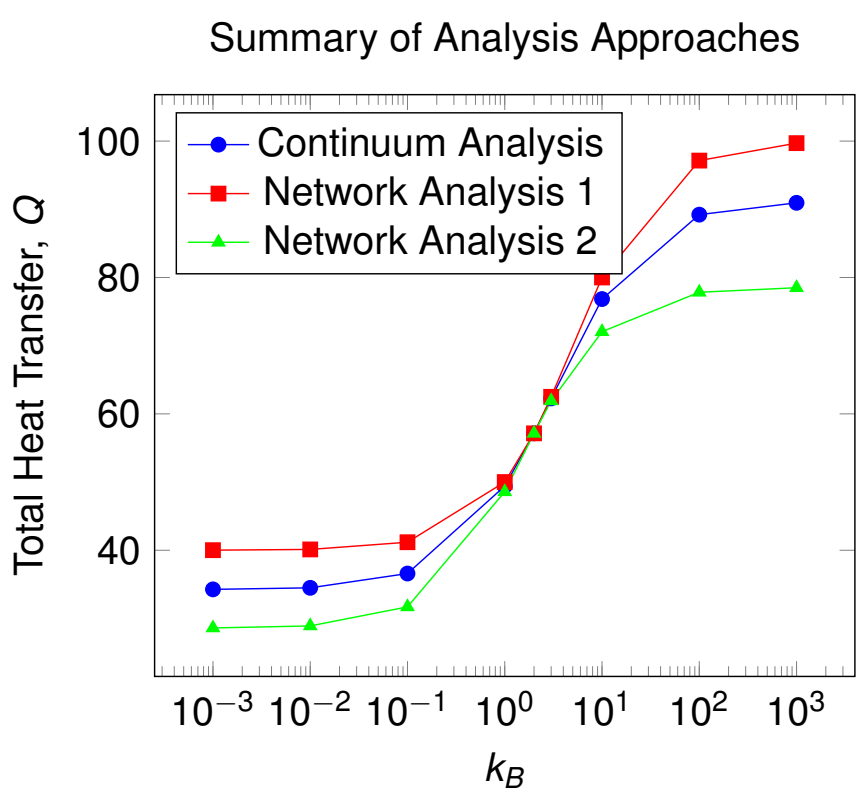

Conclusion

- Continuum Model
  - Solution verification for $k_B = 2.0$
  - Grid convergence study completed
- Network Model
  - Solution verification for $k_B = 2.0$
- The two-dimensional solution of the continuum approach is bounded by the two network models
- Network model 1 consistently over predicts the heat flow rate
- Network model 2 consistently under predicts the heat flow rate

Questions?

References I

[BLID11] T.L. Bergman, A.S. Lavine, F.P. Incropera, and D.P. DeWitt.
Introduction to Heat Transfer.
John Wiley & Sons, New York, sixth edition, 2011.