Fin Convection Experiment

Thermal Network Solution with TNSolver

Bob Cochran
Applied Computational Heat Transfer
Seattle, WA
TNSolver@heattransfer.org

ME 331 Introduction to Heat Transfer
University of Washington
October 10, 2017

Outline

- Fin Convection Experiment
- Math Model
- Thermal Network Model Analysis
- Calculations

Fins to be Studied

Fin Convection Experiment

- Four uniform cross section fins will be studied
- Steady state, forced and natural convection
- Three are circular, ●, and one is diamond shaped ◆ (a square, rotated 45°)

Fin Material	Dimensions	k (W/m-K)
Aluminum Alloy 6061-T6	0.5” ⌀ X 11.22” L	167.0
Copper Alloy 110	0.5” □ X 11.22” L	388.0
Copper Alloy 110	0.5” ⌀ X 6.77” L	388.0
Stainless Steel Alloy	0.375” ⌀ X 11.22” L	16.0

Test Setup

Fin Convection Experiment

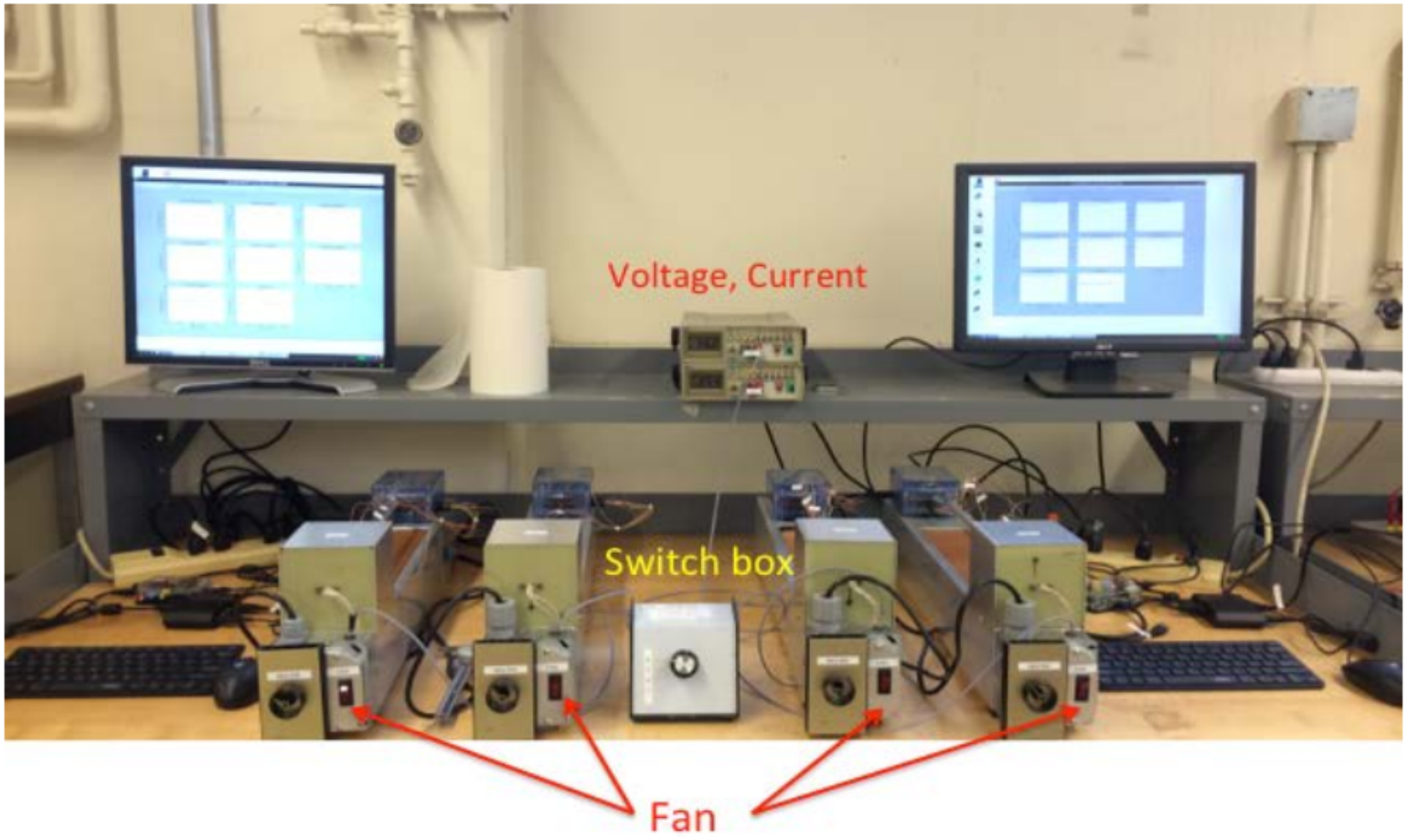

Test Fixture Assembly

Fin Convection Experiment

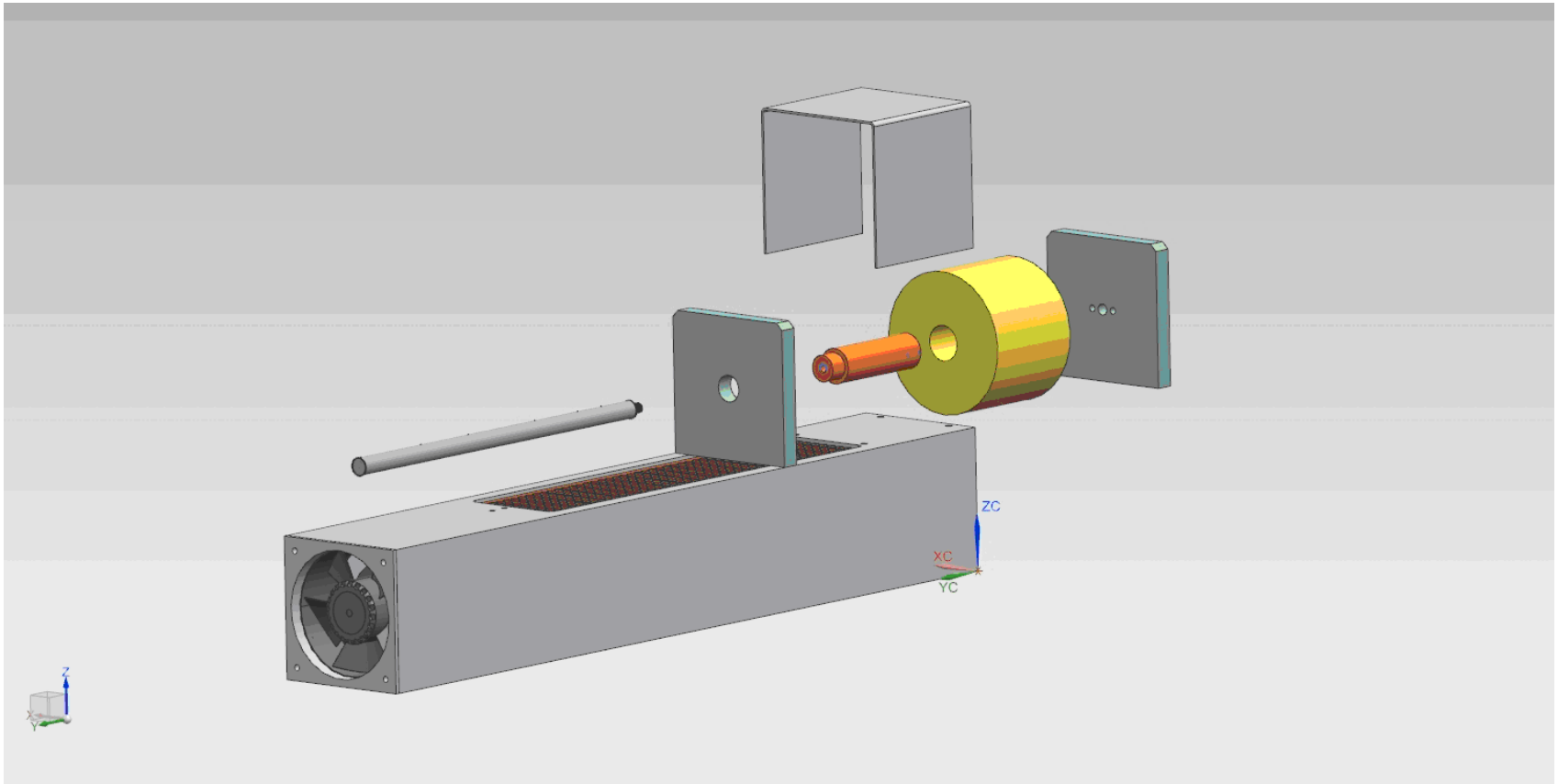

Measurements

Fin Convection Experiment

The following measurements are made:

- Base temperature of the fin
- Heater power
- Ambient air temperature
- Fin temperatures along the length of the fin
  - Thermocouples are located at the center line of the fin
- Flow velocity for forced convection

A typical data set is shown for the aluminum fin, for both forced and natural convection.

Aluminum Fin - Forced Convection

Fin Convection Experiment

Heater Power = 10.53 W

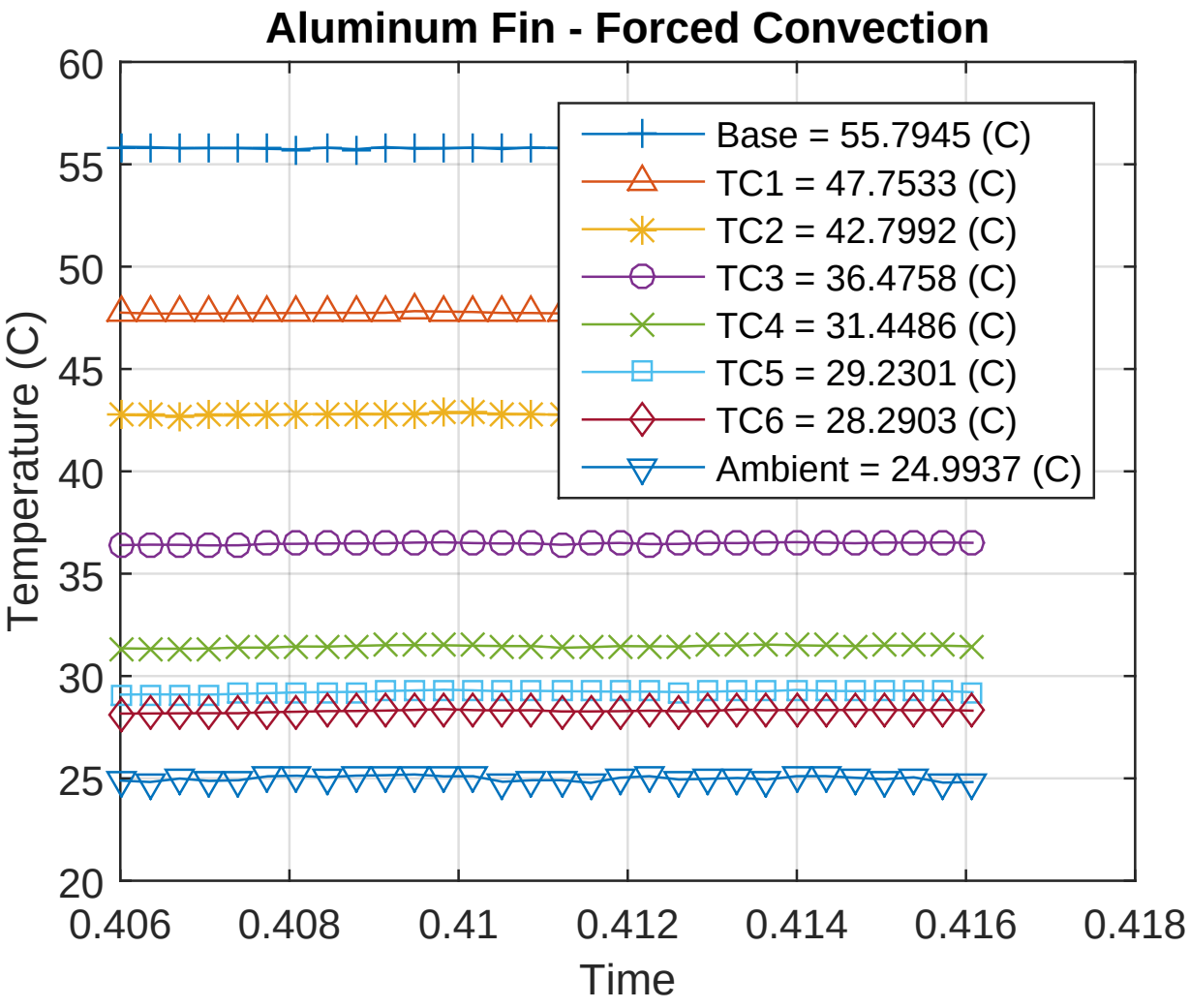

Aluminum Fin - Natural Convection

Fin Convection Experiment

Heater Power = 10.53 W

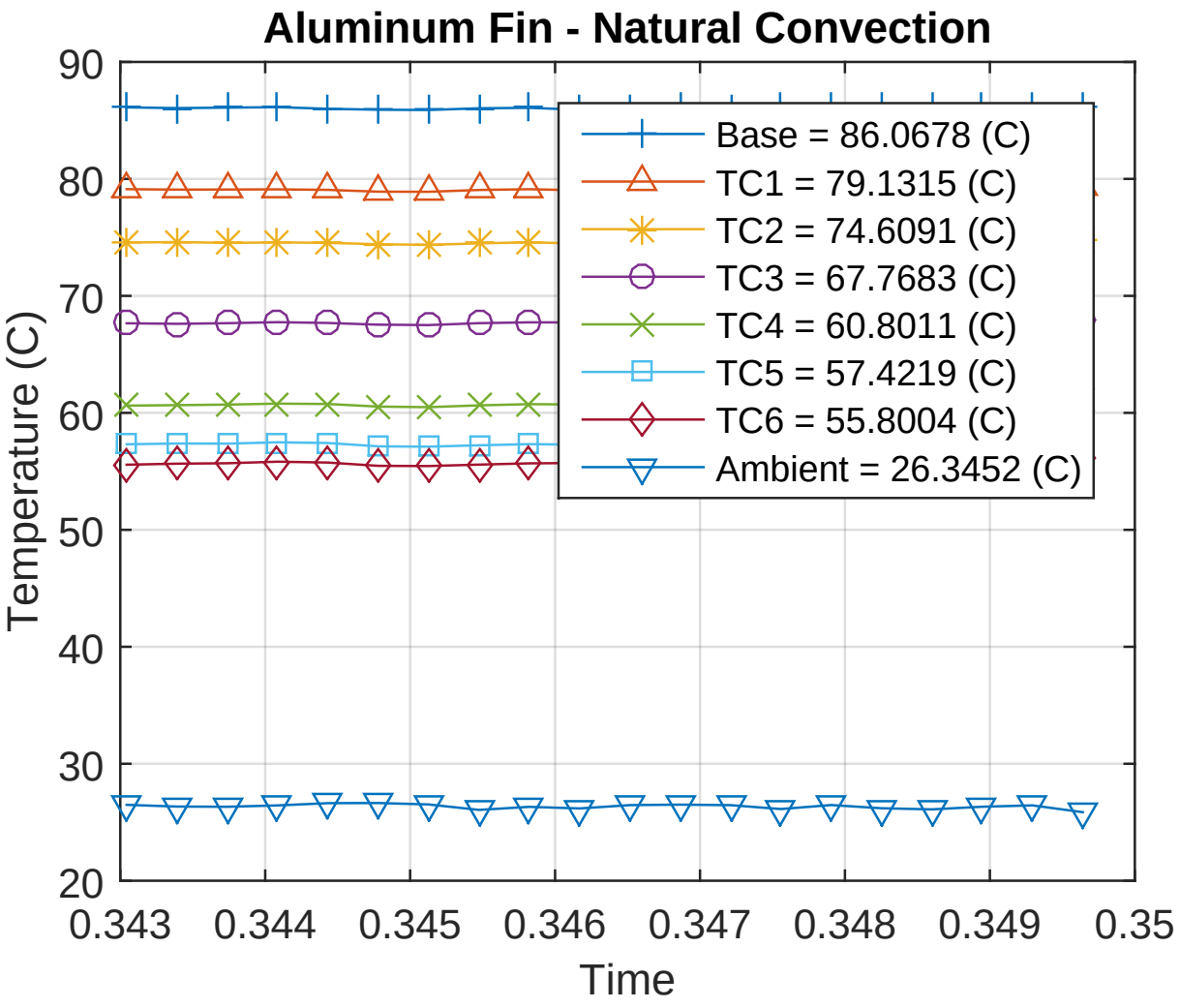

Math Model Overview

Math Model

- Conduction
- Forced Convection Correlations
- Natural or Free Convection Correlations
- Surface Radiation

Heat Conduction: Cartesian Coordinates (Plane Wall)

Math Model

The rate of heat transfer, Q_{ij}, due to conduction, between the two temperatures T_i and T_j, separated by a distance L and area A, is:

$$Q_{ij} = \frac{kA}{L}\left(T_i - T_j\right)$$

The heat flux, q_{ij}, is:

$$q_{ij} = \frac{Q_{ij}}{A} = \frac{k}{L}\left(T_i - T_j\right)$$

where k is the thermal conductivity of the material.

Convection Correlations

Math Model

The convection heat flow rate is:

$$Q = hA(T_s - T_\infty)$$

where h is the heat transfer coefficient, T_s is the surface temperature and T_∞ is the fluid temperature

External Forced Convection over a Cylinder

Math Model

Correlation is (Equation (7.44), page 436 in [BLID11] and [KK58]):

$$\overline{Nu}_D \equiv \frac{\bar{h}D}{k} = CRe_D^m Pr^{1/3}$$

where D is the diameter of the cylinder and the Reynolds number is $Re_D = \rho VD/\mu = VD/\nu$.

Re_D	C	m
0.4–4	0.989	0.330
4–40	0.911	0.385
40–4,000	0.683	0.466
4,000–40,000	0.193	0.618
40,000–400,000	0.027	0.805

Table 7.2, page 437 in [BLID11]

External Forced Convection over a Noncircular Cylinder

Math Model

For the case of a gas flowing over noncircular cylinders in crossflow (Table 7.3, page 437 in [BLID11] and [SAT04]):

Geometry	Re_D	C	m
$\rightrightarrows$ ◆ $D = \sqrt{2H^2}$	6,000–60,000	0.304	0.59
$\rightrightarrows$ ■ $D = H$	5,000–60,000	0.158	0.66

Note that the fluid properties are evaluated at the film temperature, T_f:

$$T_f = \frac{T_s + T_\infty}{2}$$

External Natural Convection over a Horizontal Cylinder

Math Model

Correlation is (see Equation (9.34), page 581 in [BLID11] and [CC75]):

$$\overline{Nu}_D = \frac{\bar{h}D}{k} = \left\{ 0.60 + \frac{0.387 Ra_D^{1/6}}{\left[1 + (0.559/Pr)^{9/16}\right]^{8/27}} \right\}^2$$

valid for $Ra_D \leq 10^{12}$, $Pr \geq 0.7$, where D is the diameter of the cylinder and the Rayleigh number, Ra, is:

$$Ra_D = GrPr = \frac{g\rho^2 c\beta D^3 (T_s - T_\infty)}{k\mu} = \frac{g\beta D^3 (T_s - T_\infty)}{\nu\alpha}$$

Note that the fluid properties are evaluated at the film temperature, T_f:

$$T_f = \frac{T_s + T_\infty}{2}$$

Surface Radiation

Math Model

Radiation exchange between a surface and *large* surroundings
The heat flow rate is (Equation (1.7), page 10 in [BLID11]):

$$Q = \sigma \epsilon_s A_s (T_s^4 - T_{sur}^4)$$

where σ is the Stefan-Boltzmann constant, ϵ_s is the surface emissivity and A_s is the area of the surface.
Note that the surface area, A_s, must be *much* smaller than the surrounding surface area, A_{sur}:

$$A_s \ll A_{sur}$$

Note that the temperatures must be the absolute temperature, K or $^\circ R$

Radiation Heat Transfer Coefficient

Math Model

Define the radiation heat transfer coefficient, h_r (see Equation (1.9), page 10 in [BLID11]):

$$h_r = \epsilon\sigma(T_s + T_{sur})(T_s^2 + T_{sur}^2)$$

Then,

$$Q = h_r A_s(T_s - T_{sur})$$

Note:

- h_r is temperature dependent
- h_r can be used to compare the radiation to the convection heat transfer from a surface, h (if T_{sur} and T_∞ have similar values)

Thermocouple Locations for Aluminum Fin

Thermal Network Model Analysis

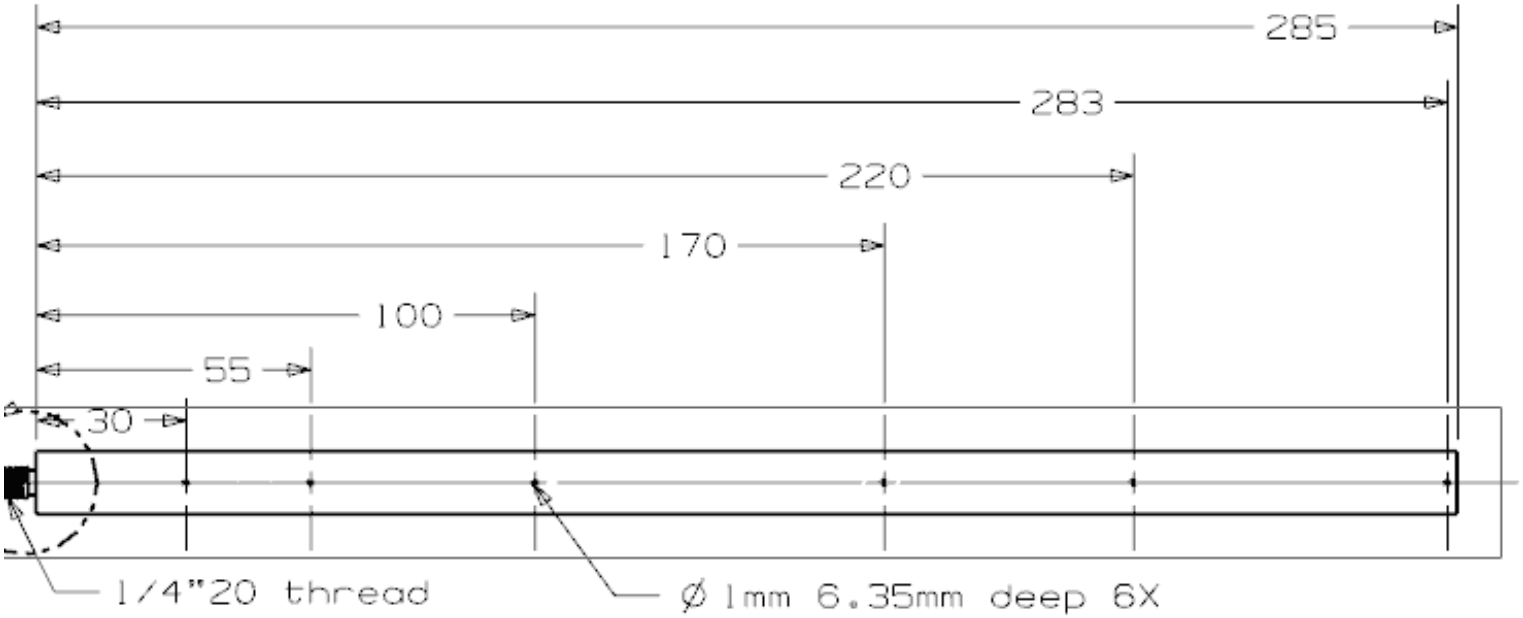

Position Along the Fin (m)

Base	TC1	TC2	TC3	TC4	TC5	TC6
0.0	.03	.055	.1	.170	.220	.283

Long Fin Thermal Network Model

Thermal Network Model Analysis

For the long fins, there are six thermocouples:

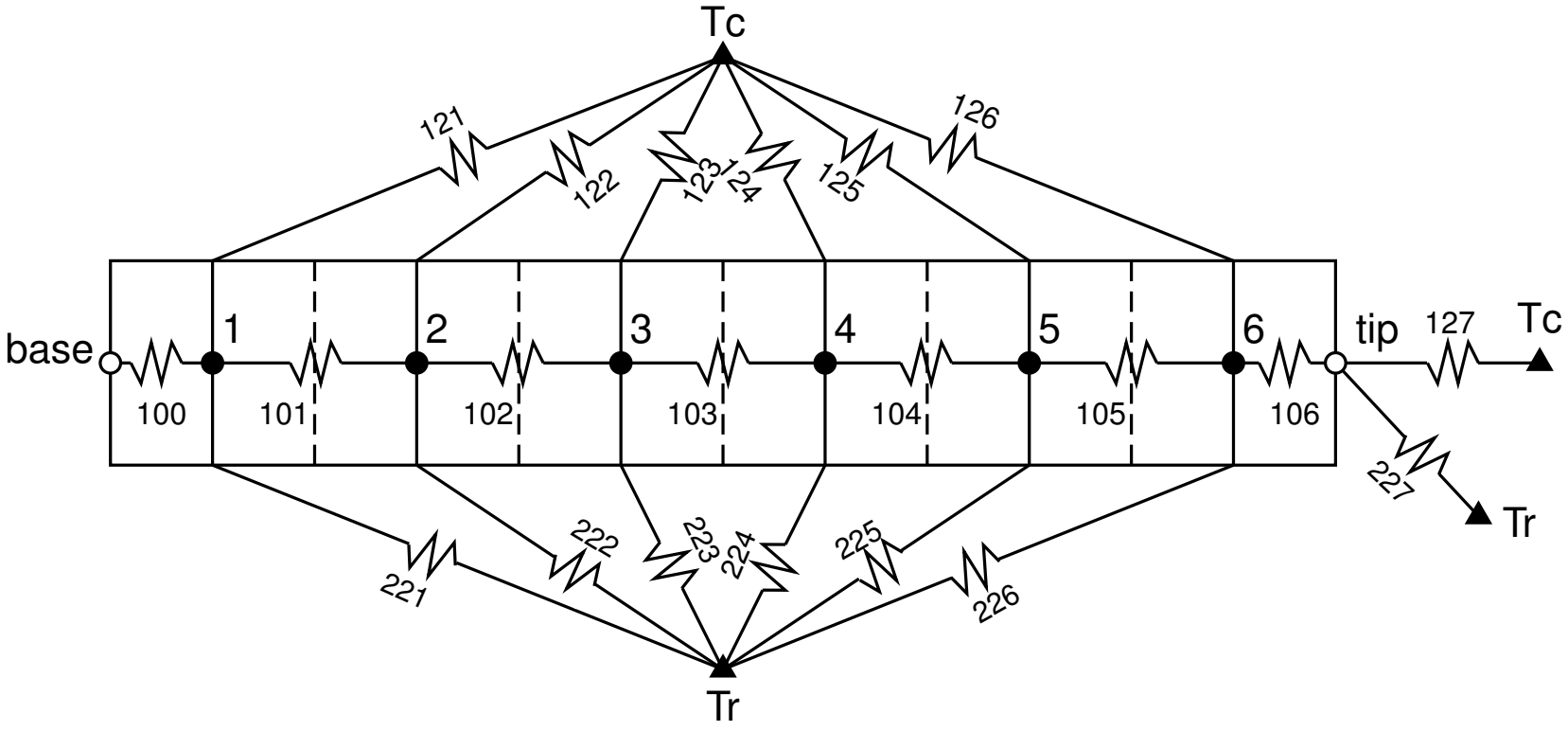

Short Copper Fin Thermal Network Model

Thermal Network Model Analysis

For the short copper fin, there are four thermocouples:

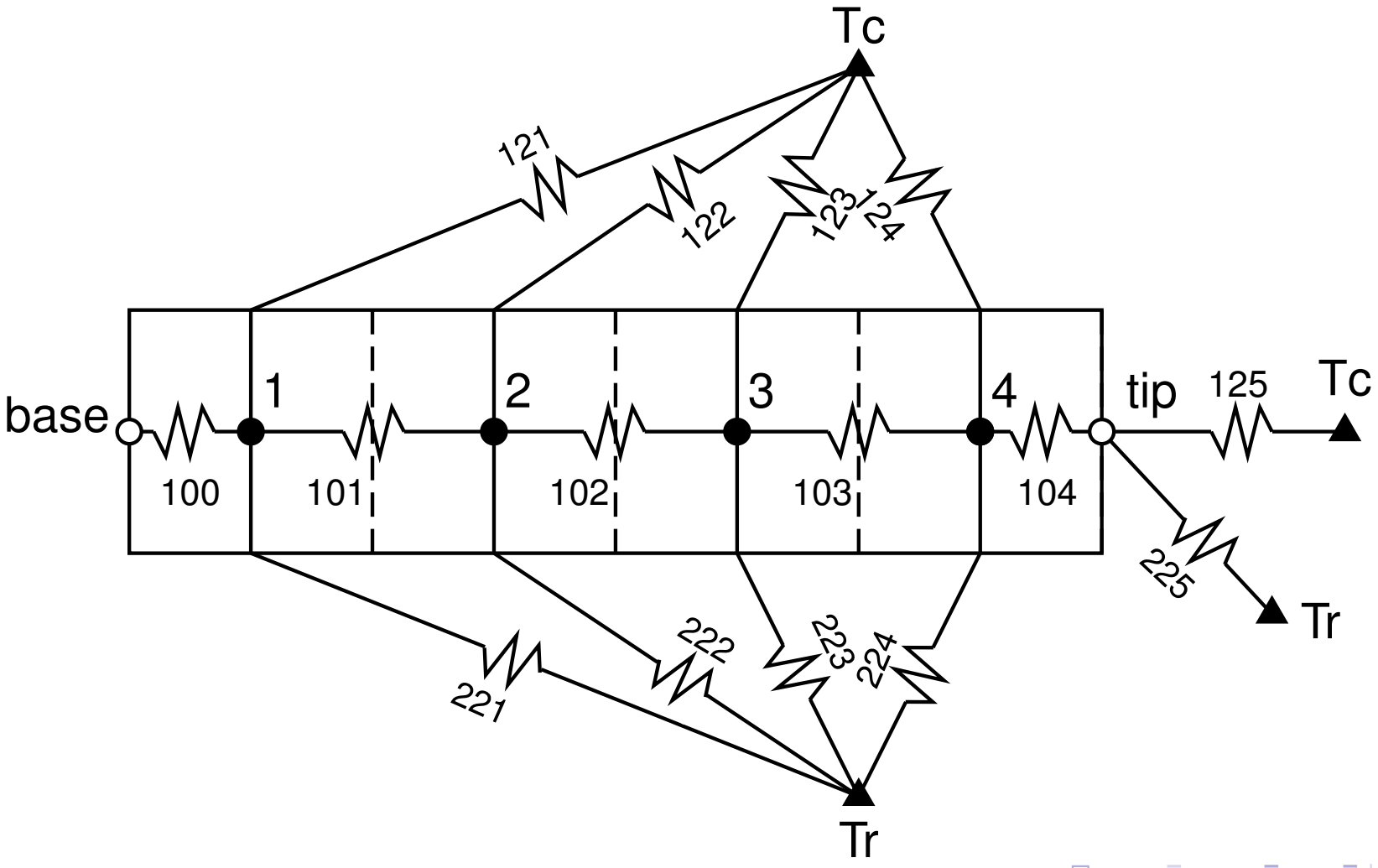

TNSolver Input Files

Thermal Network Model Analysis

The supplied TNSolver input files for each fin model:

Fin	Forced Convection	Natural Convection
Aluminum, 11.22”	`Al_fin_FC.inp`	`Al_fin_NC.inp`
Round Copper, 6.77”	`Cu_fin_FC.inp`	`Cu_fin_NC.inp`
Square Copper, 11.22”	`sqCu_fin_FC.inp`	`sqCu_fin_NC.inp`
Stainless Steel, 11.22”	`SS_fin_FC.inp`	`SS_fin_NC.inp`

Edit each file to set appropriate boundary conditions (Tc, Tr and base) and flow velocities (forced convection models) for your specific experimental data set

TNSolver Input Files for Estimating h

Thermal Network Model Analysis

The supplied TNSolver input files for each fin model to be used with `ls_fin_h.m`:

Fin	Convection
Aluminum, 11.22”	`Al_fin_C.inp`
Round Copper, 6.77”	`Cu_fin_C.inp`
Square Copper, 11.22”	`sqCu_fin_C.inp`
Stainless Steel, 11.22”	`SS_fin_C.inp`

Edit each file to set appropriate boundary conditions (Tc, Tr and base) for your specific experimental data set

Running a TNSolver Model

Thermal Network Model Analysis

The MATLAB/Octave command to run the aluminum fin, forced convection model is:

```
>>tnsolver('Al_fin_FC');
```

Note that you supply the base of the input file name (`AL_fin_FC`, in this example), without the `.inp` extension

The results output file will be the base name with the extension `.out` (`Al_fin_FC.out`, in this example)

Surface Radiation Properties

Thermal Network Model Analysis

Fin Material	Emissivity, ϵ (dimensionless)
Aluminum Alloy 6061-T6	0.09
Copper Alloy 110	0.12-0.15
Stainless Steel Alloy	0.5-0.7

See Table A.8, page 922, in [BLID11]
See Table 10.1, page 530, in [LL16]

Verification with Analytical Solution

Thermal Network Model Analysis

Table 3.4, page 161 in [BLID11], Temperature distribution and heat loss for fins with a uniform cross section

Case	Tip Condition	Temperature, θ/θ_b	Fin Heat Transfer Rate, Q
A	Convection	$\frac{\cosh m(L-x)+(h/mk)\sinh m(L-x)}{\cosh mL+(h/mk)\sinh ml}$	$M\frac{\sinh mL+(h/mk)\cosh mL}{\cosh mL+(h/mk)\sinh mL}$
B	Adiabatic	$\frac{\cosh m(L-x)}{\cosh mL}$	$M\tanh mL$
C	Specified T	$\frac{(\theta_L/\theta_b)\sinh mx+\sinh m(L-x)}{\sinh mL}$	$M\frac{\cosh mL-(\theta_L/\theta_b)}{\sinh mL}$
D	$L=\infty$	e^{mx}	M

$\theta = T - T_\infty$ $\quad m = \sqrt{hP/kA_c}$

$\theta_b = \theta(0) = T_b - T_\infty$ $\quad M = (\sqrt{hPkA_c})\theta_b$

For circular fins: $P = \pi D$ and $A_c = \pi(D/2)^2$

For square/diamond fins: $P = 4H$ and $A_c = H^2$

Comparison with TNSolver Network Model

Thermal Network Model Analysis

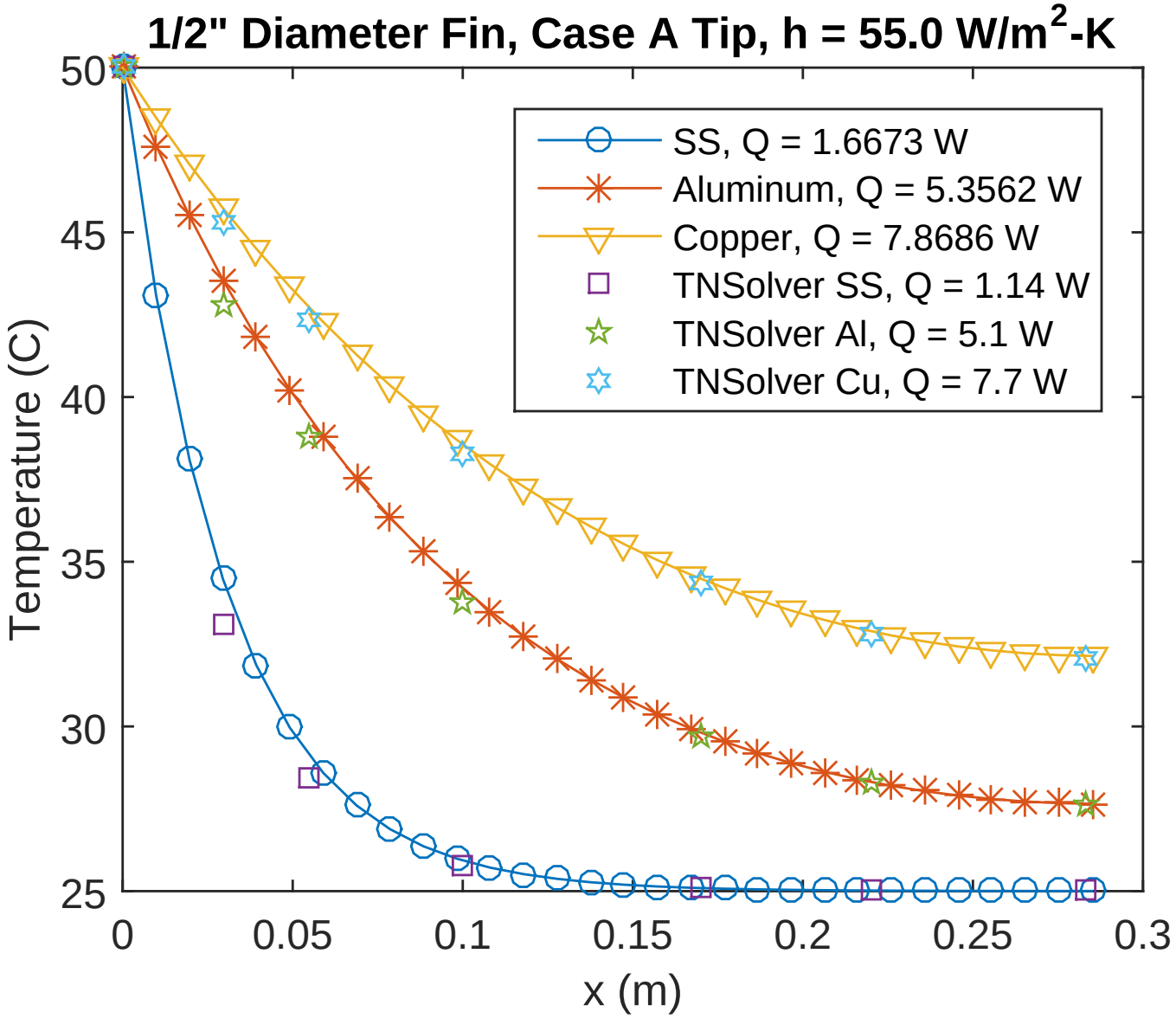

Calculations

Calculations

For the four forced convection experimental data sets:

1. Using forced convection correlations, determine h and h_r for each fin
   - `EFCcyl` and `EFCdiamond` conductors
2. Using least-squares fit, estimate ϵ, using forced convection correlations
   - `ls_fin_emiss.m` function
3. Using least-squares fit, estimate h, using estimated ϵ and forced convection correlations
   - `ls_fin_h.m` function

How does the estimated h compare to the correlation?

How does the estimated ϵ compare to the material property table value?

Calculations (continued)

Calculations

For four free convection experimental data sets:

1. Using free convection correlations, determine h and h_r for each fin
   - `ENChcyl` conductor
2. Using least-squares fit, estimate ϵ, using free convection correlation
   - `ls_fin_emiss.m` function
3. Using least-squares fit, estimate h, using estimated ϵ and free convection correlation
   - `ls_fin_h.m` function

How does the estimated h compare to the correlation?

How does the estimated ϵ compare to the material property table value?

Least Squares Estimation

Calculations

Least squares estimation of a parameter θ, for n data points, is:

$$R = \sum_{i=1}^{n} \left(\theta^{i}_{\text{exp}} - \theta^{i}_{\text{model}} \right)^{2}$$

The closest model parameter is determined by the index i, of the minimum R

Function to estimate emissivity, ϵ, is: `ls_fin_emiss.m`

Function to estimate convection coefficent, h, is: `ls_fin_h.m`

Conclusion

- Fin convection experiment overview
- Conduction, convection and surface radiation math model
- Thermal network model analysis
- Calculations using the experimental data

Questions?

Appendix

Heat Transfer Analysis

Thermal Network Model

- Energy conservation: control volumes
- Identify and sketch out the control volumes
- Use the conductor analogy to represent energy transfer between the control volumes and energy generation or storage
  - Conduction, convection, radiation, other?
  - Capacitance
  - Sources or sinks
- State assumptions and determine appropriate parameters for each conductor
  - Geometry, material properties, etc.
- Which conductor(s)/source(s)/capacitance(s) are important to the required results?
  - Sensitivity analysis
- What is missing from the model? - peer/expert review

Thermal Network Terminology

Thermal Network Model

- Geometry
  - Control Volume
    - Volume property, $V = \int_V dV$
    - Node: ●, $T_{\text{node}} = \int_V T(x_i) dV$
  - Control Volume Surface
    - Area property, $A = \int_A dA$
    - Surface Node: ○, $T_{\text{surface node}} = \int_A T(x_i) dA$
- Material properties
- Conductors
  - Conduction, convection, radiation
- Boundary conditions
  - Boundary node: ▲

Thermal Network Analysis

Thermal Network Model

For the 11.22” long fin, there are six thermocouples:

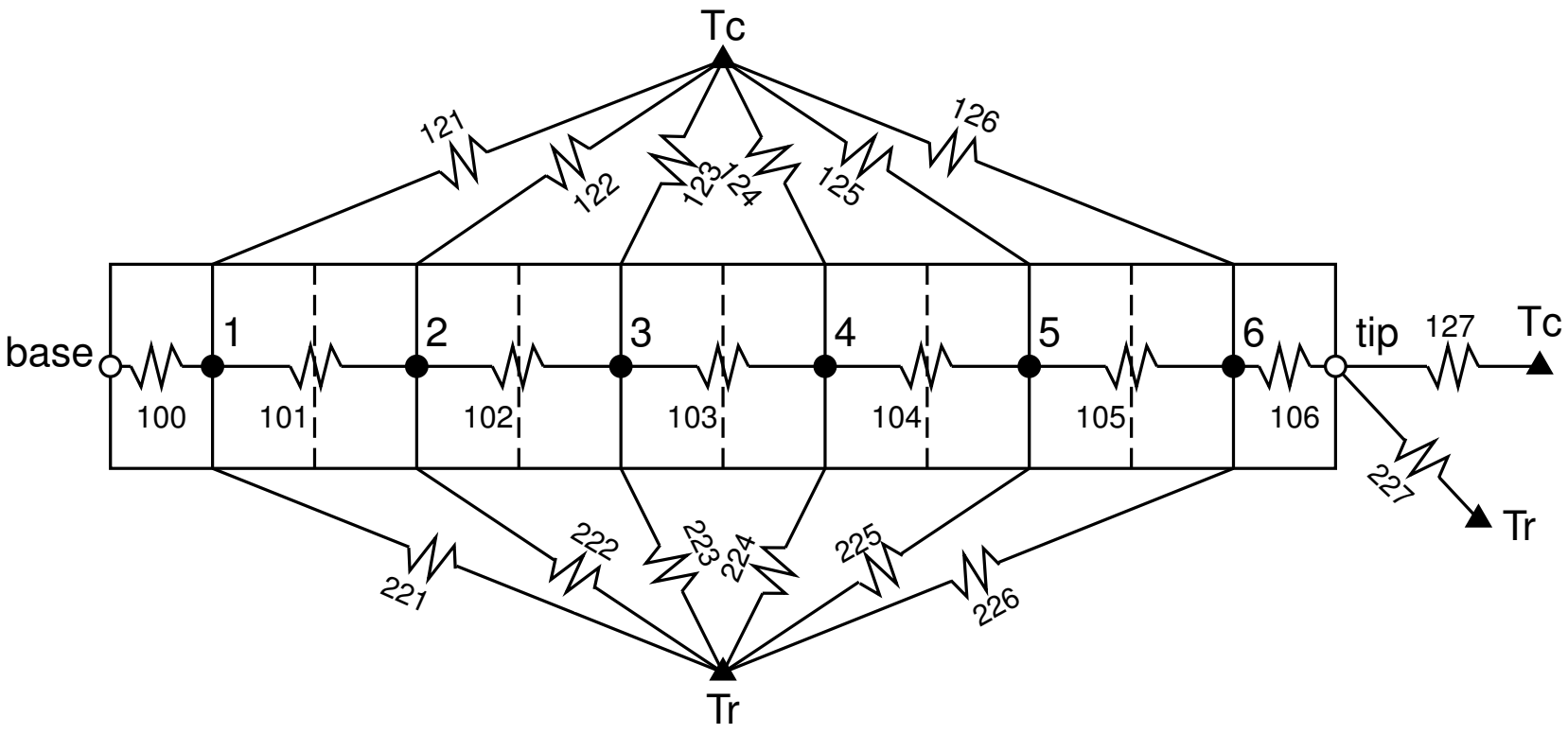

Thermal Network Analysis

Thermal Network Model

For the 6.77” long fin, there are four thermocouples:

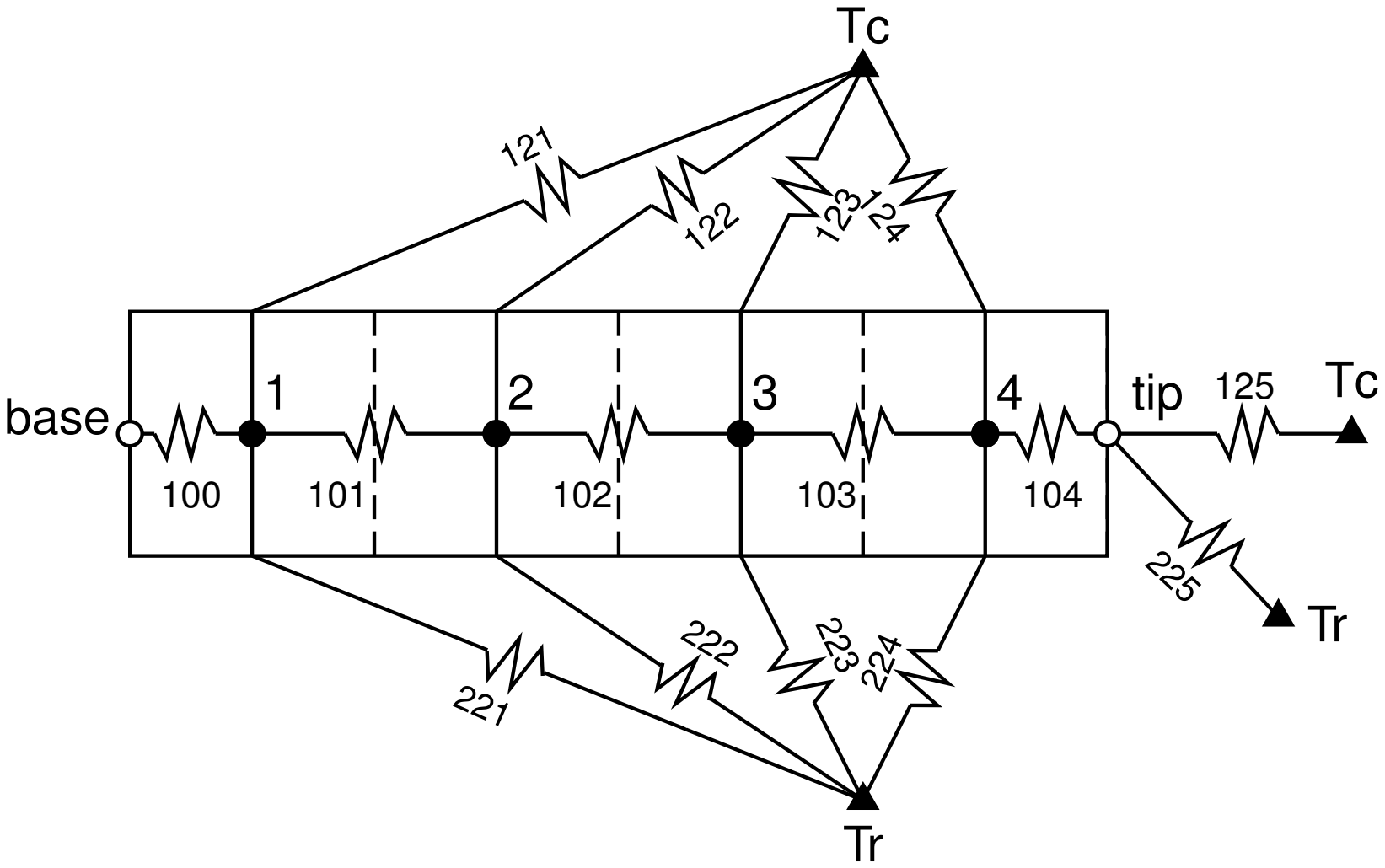

Control Volume Geometry

Thermal Network Model

Scale drawing of thermocouple locations and control volume lengths:

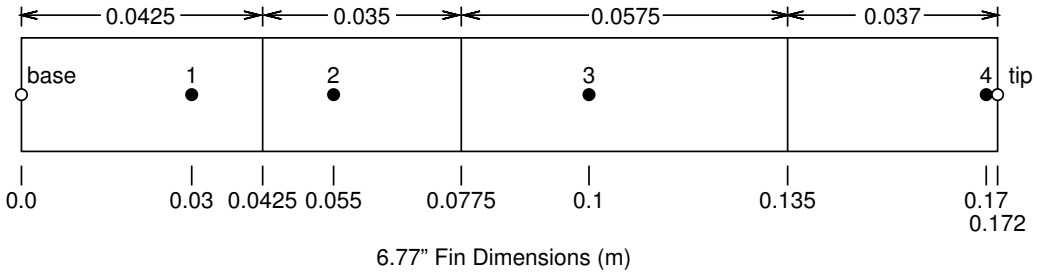

6.77" Fin Dimensions (m)

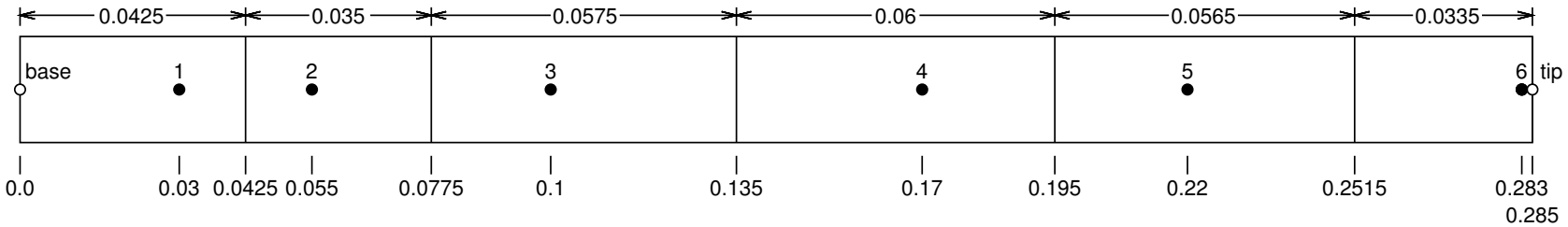

11.22" Fin Dimensions (m)

Note that the control volume boundaries are located midway between the thermocouple locations

Round Fin, 11.22” Long, Conduction Geometry

Thermal Network Model

Axial conduction in the fin, L = 11.22” = 0.285 m
D = 0.5” = 0.0127 m and r = 0.25” = 0.00635 m:

$L =$ distance between TC $\qquad A = \pi r^2$

Conductor	Length (m)	A (m^2)
100	0.030	0.00012667
101	0.025	0.00012667
102	0.045	0.00012667
103	0.070	0.00012667
104	0.050	0.00012667
105	0.063	0.00012667
106	0.002	0.00012667

Round Fin, 11.22” Long, Convection Geometry

Thermal Network Model

Surface convection area:

$$A = L_{CV} P = L_{CV} \pi D$$

D = 0.5” = 0.0127 m

Conductor	L_{CV} (m)	A (m^2)
121	0.0425	0.001696
122	0.0350	0.001396
123	0.0575	0.002294
124	0.0600	0.002394
125	0.0565	0.002254
126	0.0335	0.001337

Round Fin, 6.77” Long, Conduction Geometry

Thermal Network Model

Axial conduction in the fin, L = 6.77” = 0.172 m
D = 0.5” = 0.0127 m and r = 0.25” = 0.00635 m:

$L =$ distance between TC $\qquad A = \pi r^2$

Conductor	Length (m)	A (m^2)
100	0.030	0.00012667
101	0.025	0.00012667
102	0.045	0.00012667
103	0.070	0.00012667
104	0.002	0.00012667

Round Fin, 6.77” Long, Convection Geometry

Thermal Network Model

Surface convection area:

$$A = L_{CV} P = L_{CV} \pi D$$

D = 0.5” = 0.0127 m

Conductor	L_{CV} (m)	A (m^2)
121	0.0425	0.001696
122	0.0350	0.001396
123	0.0575	0.002294
124	0.0370	0.001476

Square Fin, 11.22” Long, Conduction Geometry

Thermal Network Model

Axial conduction in the fin, L = 11.22” = 0.285 m, H = 0.5” = 0.0127 m

$L =$ distance between TC $\qquad A = H^2$

Conductor	Length (m)	A (m^2)
100	0.030	0.000016129
101	0.025	0.000016129
102	0.045	0.000016129
103	0.070	0.000016129
104	0.050	0.000016129
105	0.063	0.000016129
106	0.002	0.000016129

Square Fin, 11.22” Long, Convection Geometry

Thermal Network Model

Surface convection area:

$$A = L_{CV}P = L_{CV}4H$$

H = 0.5” = 0.0127 m

Conductor	L_{CV} (m)	A (m^2)
121	0.0425	0.002159
122	0.0350	0.001778
123	0.0575	0.002921
124	0.0600	0.003048
125	0.0565	0.0028702
126	0.0335	0.0017018

Conduction Conductor

Thermal Network Model

$$Q_{ij} = \frac{kA}{L}(T_i - T_j)$$

```
Begin Conductors

! label type        nd_i nd_j    k     L          A
  100  conduction  base    1    x.x  0.030  0.00012667
  101  conduction   1      2    x.x  0.025  0.00012667
  102  conduction   2      3    x.x  0.045  0.00012667
  103  conduction   3      4    x.x  0.070  0.00012667
  104  conduction   4      5    x.x  0.050  0.00012667
  105  conduction   5      6    x.x  0.063  0.00012667
  106  conduction   6     tip   x.x  0.002  0.00012667

End Conductors
```

Convection Conductor

Thermal Network Model

$$Q_{ij} = hA(T_s - T_\infty) = hA(T_i - T_j)$$

```
Begin Conductors

! label   type     nd_i nd_j  h      A
   121  convection  1    Tc  x.x  0.001696
   122  convection  2    Tc  x.x  0.001396
   123  convection  3    Tc  x.x  0.002294
   124  convection  4    Tc  x.x  0.002394
   125  convection  5    Tc  x.x  0.002254
   126  convection  6    Tc  x.x  0.001337
   127  convection tip   Tc  x.x  0.00012667

End Conductors
```

Forced Convection Over Cylinder Conductor

Thermal Network Model

Heat transfer coefficient, h, is evaluated using the correlation.

```
Begin Conductors

! label type   nd_i   nd_j fluid  V     D        A
  121  EFCcyl   1     Tc   air  x.x  0.0127  0.001696
  122  EFCcyl   2     Tc   air  x.x  0.0127  0.001396
  123  EFCcyl   3     Tc   air  x.x  0.0127  0.002294
  124  EFCcyl   4     Tc   air  x.x  0.0127  0.002394
  125  EFCcyl   5     Tc   air  x.x  0.0127  0.002254
  126  EFCcyl   6     Tc   air  x.x  0.0127  0.001337
  127  EFCcyl  tip    Tc   air  x.x  0.0127  0.00012667

End Conductors
```

Note that Re, Nu and h are reported in the output file.

Forced Convection Over Diamond Conductor

Thermal Network Model

Heat transfer coefficient, h, is evaluated using the correlation.

```
Begin Conductors

! label type       nd_i  nd_j fluid  V    D       A
  121  EFCdiamond   1    Tc   air  x.x  0.018   0.002159
  122  EFCdiamond   2    Tc   air  x.x  0.018   0.001778
  123  EFCdiamond   3    Tc   air  x.x  0.018   0.002921
  124  EFCdiamond   4    Tc   air  x.x  0.018   0.003048
  125  EFCdiamond   5    Tc   air  x.x  0.018   0.0028702
  126  EFCdiamond   6    Tc   air  x.x  0.018   0.0017018
  127  EFCdiamond  tip   Tc   air  x.x  0.0127  0.00012667

End Conductors
```

Note that Re, Nu and h are reported in the output file.

Natural Convection Conductor

Thermal Network Model

Heat transfer coefficient, h, is evaluated using the correlation.

```
Begin Conductors

! label type   nd_i   nd_j fluid  D        A
  121  ENChcyl  1     Tc   air  0.0127  0.001696
  122  ENChcyl  2     Tc   air  0.0127  0.001396
  123  ENChcyl  3     Tc   air  0.0127  0.002294
  124  ENChcyl  4     Tc   air  0.0127  0.002394
  125  ENChcyl  5     Tc   air  0.0127  0.002254
  126  ENChcyl  6     Tc   air  0.0127  0.001337
  127  ENChcyl tip    Tc   air  0.0127  0.00012667

End Conductors
```

Note that Ra, Nu and h are reported in the output file.

Surface Radiation Conductor

Thermal Network Model

$$Q_{ij} = \sigma \epsilon_i A_i (T_i^4 - T_j^4)$$

```
Begin Conductors

! label type     nd_i nd_j emissivity      A
  221  surfrad   1    Tr    x.xx       0.001696
  222  surfrad   2    Tr    x.xx       0.001396
  223  surfrad   3    Tr    x.xx       0.002294
  224  surfrad   4    Tr    x.xx       0.002394
  225  surfrad   5    Tr    x.xx       0.002254
  226  surfrad   6    Tr    x.xx       0.001337
  227  surfrad  tip   Tr    x.xx       0.00012667

End Conductors
```

Note that h_r is reported in the output file.

Boundary Conditions

Thermal Network Model

```
Begin Boundary Conditions

!  type          Tb       Node(s)
  fixed_T      x.xx       Tc    ! fluid T
  fixed_T      x.xx       Tr    ! surrounding radiation T
  fixed_T      x.xx       base ! fin base T

End Boundary Conditions
```

TNSolver Input Files

Thermal Network Model

The supplied TNSolver input files for each fin model:

Fin	Forced Convection	Natural Convection
Aluminum, 11.22”	`Al_fin_FC.inp`	`Al_fin_NC.inp`
Round Copper, 6.77”	`Cu_fin_FC.inp`	`Cu_fin_NC.inp`
Square Copper, 11.22”	`sqCu_fin_FC.inp`	`sqCu_fin_NC.inp`
Stainless Steel, 11.22”	`SS_fin_FC.inp`	`SS_fin_NC.inp`

Edit each file to set appropriate boundary conditions (Tc, Tr and base) and flow velocities (forced convection models) for your specific experimental data set

Running a TNSolver Model

Thermal Network Model

The MATLAB/Octave command to run the aluminum fin, forced convection model is:

```
>>tnsolver('Al_fin_FC');
```

Note that you supply the base of the input file name (`AL_fin_FC`, in this example), without the `.inp` extension

The results output file will be the base name with the extension `.out` (`Al_fin_FC.out`, in this example)

Screen Output When Running TNSolver

Thermal Network Model

```
*************************************************************
*                                                           *
*          TNSolver - A Thermal Network Solver              *
*                                                           *
*            Version 0.2.0, October 28, 2014                *
*                                                           *
*************************************************************

Reading the input file: Al_fin_FC.inp

Initializing the thermal network model ...

Starting solution of a steady thermal network model ...

     Nonlinear Solve
  Iteration    Residual
  ---------  ------------
        1     52.9978
        2     0.0309635
        3     1.21353e-05
        4     5.09316e-09

Results have been written to: Al_fin_FC.out

All done ...
```

View TNSolver Output File For Results

Thermal Network Model

Open `Al_fin_FC.out` in your favorite text editor

```
*************************************************************
*                                                           *
*          TNSolver - A Thermal Network Solver              *
*                                                           *
*            Version 0.2.0, October 28, 2014                *
*                                                           *
*************************************************************

Model run finished at 10:05 AM, on October 29, 2014

*** Solution Parameters ***

  Title: Aluminum Fin - Forced Convection

  Type                           =  steady
  Units                          =  SI
  Temperature units              =  C
  Nonlinear convergence          =  1e-008
  Maximum nonlinear iterations   =  15
  Gravity                        =  9.80665 (m/s^2)
  Stefan-Boltzmann constant      =  5.67037e-008 (W/m^2-K^4)
```

View TNSolver Output File For Results (continued)

Thermal Network Model

```
*** Nodes ***

                          Volume   Temperature
   Label    Material      (m^3)        (C)
 --------- ---------- ---------- -----------
         1        N/A          0     47.1038
         2        N/A          0      42.202
         3        N/A          0     36.0832
         4        N/A          0     31.0199
         5        N/A          0      29.207
         6        N/A          0     28.4181
        Tc        N/A          0          25
        Tr        N/A          0          25
      base        N/A          0        55.8
       tip        N/A          0      28.416
```

View TNSolver Output File For Results (continued)

Thermal Network Model

```
*** Conductors ***

                                                  Q_ij
    Label        Type      Node i      Node j      (W)
 ---------- ---------- ---------- ---------- ----------
        100 conduction       base          1    6.13192
        101 conduction          1          2    4.14771
        102 conduction          2          3    2.87638
        103 conduction          3          4    1.53011
        104 conduction          4          5   0.766993
        105 conduction          5          6   0.264889
        106 conduction          6        tip  0.0229109
        121     EFCcyl          1         Tc    1.96157
        122     EFCcyl          2         Tc    1.25717
        123     EFCcyl          3         Tc    1.33172
        124     EFCcyl          4         Tc   0.755085
        125     EFCcyl          5         Tc   0.496864
        126     EFCcyl          6         Tc   0.239463
        127     EFCcyl        tip         Tc  0.0226728
        221    surfrad          1         Tr  0.0226511
        222    surfrad          2         Tr  0.0141605
        223    surfrad          3         Tr  0.0145417
        224    surfrad          4         Tr 0.00803642
        225    surfrad          5         Tr 0.00523996
        226    surfrad          6         Tr 0.00251536
        227    surfrad        tip         Tr 0.000238156
```

View TNSolver Output File For Results (continued)

Thermal Network Model

```
*** Conductor Parameters ***

surfrad: Surface Radiation

                h_r
    label    (W/m^2-K)
 ---------- ----------
        221    0.60422
        222   0.589676
        223   0.571949
        224   0.557634
        225   0.552586
        226   0.550402
        227   0.550396

EFCcyl: External Forced Convection - Cylinder

                                        h
    label    Re Number  Nu Number  (W/m^2-K)
 ---------- ---------- ---------- ----------
        121    2832.69    24.7609     52.325
        122    2869.36    24.9192    52.3515
        123    2917.02    25.1207    52.3789
        124    2958.53    25.2909    52.3941
        125    2973.94    25.3526    52.3974
        126    2980.75    25.3797    52.3984
        127    2980.77    25.3798    52.3984
```

References I

[BLID11] T.L. Bergman, A.S. Lavine, F.P. Incropera, and D.P. DeWitt.
Introduction to Heat Transfer.
John Wiley & Sons, New York, sixth edition, 2011.

[CC75] Stuart W. Churchill and Humbert H.S. Chu.
Correlating equations for laminar and turbulent free convection from a horizontal cylinder.
International Journal of Heat and Mass Transfer, 18(9):1049–1053, 1975.

[KK58] J. G. Knudsen and D. L. Katz.
Fluid Dynamics and Heat Transfer.
McGraw-Hill, New York, 1958.

References II

[LL16] J. H. Lienhard, IV and J. H. Lienhard, V.
A Heat Transfer Textbook.
Phlogiston Press, Cambridge, Massachusetts, fourth edition, 2016.
Available at: `http://ahtt.mit.edu`.

[SAT04] Ephraim M. Sparrow, John P. Abraham, and Jimmy C.K. Tong.
Archival correlations for average heat transfer coefficients for non-circular and circular cylinders and for spheres in cross-flow.
International Journal of Heat and Mass Transfer, 47:5285–5296, 2004.